1616A 1310 nm DOCSIS 3.1 DFB Laser Module

emcore
empower with light

PRELIMINARY DATASHEET | FEBRUARY 2016 FIBER OPTICS

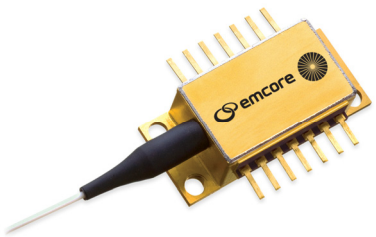

The 1616A 1310 nm DOCSIS 3.1 DFB laser module is designed for both broadcast and narrowcast analog applications. The 1616A laser module is compliant with the new DOCSIS 3.1 standard, supporting operational bandwidth up to 1.2 GHz.

This highly linear, OC-48 pinout compatible device features EMCORE's advanced analog chip design. It has optical output power options up to 31 mW with superior distortion performance over an enhanced temperature range of -40°C to +85°C.

Applications

- Broadcast and Narrowcast Networks
- Long Distances
- High Optical Splits

Features

- DOCSIS 3.1 Compliant
- OC-48 Pinout Compatible
- Telcordia® Technologies 468 Compliant
- 79 Channel Count
- Optical Output Power Up to 31 mW
- Wide Temperature Range – Stable even in Harsh Environments

Performance Highlights

	Min	Typical	Max	Units
Wavelength	1300	-	1320	nm
Optical Output Power (multiple versions)	4-31	-	-	mW
Temperature Range	-40	-	+85	°C
Frequency Range	5	-	1200	MHz
Carrier to Noise Ratio	51	-	-	dB
Composite Second Order (multiple versions)	55-60	-	-	dB
Composite Triple Beat	65	-	-	dB

GENUINE ORTEL TECHNOLOGY

© 2016 EMCORE Corporation | REV 2016.02
P +1 626-293-3400 E catv-sales@emcore.com W www.emcore.com

Information contained herein is deemed reliable and accurate as of the issue date. EMCORE reserves the right to change the design or specification at any time without notice.

Absolute Maximum Ratings

Stresses in excess of the absolute maximum ratings can cause permanent damage to the device. These are absolute stress ratings only. Functional operation of the device is not implied at these or any other conditions in excess of those given in the operational sections of the data sheet. Exposure to absolute maximum ratings for extended periods can adversely affect device reliability.

Parameter	Symbol	Condition	Min	Max	Unit
Operating Temperature Range	T_C	Continuous	-40	+85	°C
Storage Temperature Range	T_{STG}	-	-40	+85	°C
Laser Forward dc Current	-	-	-	150	mA
Photodiode Reverse Voltage	V_{RPD}	-	-	10	V
Laser Reverse Voltage, dc	-	-	-	1	V
ESD	-	HBM: R = 1500 Ohm, C = 100pF	-500	500	V
TEC Current	I_{TEC}	Continuous	-1.9	1.9	A

Electrical/Optical Characteristics

Laser Temperature (TL) = 25°C, I_F=I_{OP}, Beginning of Life (BOL)

Parameter	Symbol	Condition	Min	Typ	Max	Unit
Wavelength	-	-	1300	-	1320	nm
Optical Output Power	-	1616-xxxx-04 version See ordering page for options 1616-xxxx-31 version	4 . 31	- -	- -	mW mW
Optical Isolation	ISO	-	30	-	-	dB
Optical Return Loss	ORL	Tc	40	-	-	dB
Sidemode Suppression Ratio	SMSR	-	35	-	-	dB
Threshold Current	I_{TH}	-	-	-	20	mA
Operating Current	I_{OP}	varies with power option	-	-	120	mA
Monitor PD Responsivity	r_{PD}	V_{RM}=5V	10	-	200	µA/mW
Thermistor Resistance	R_{TH}	T_{OP}=25 °C	9.5	10	10.5	KOhm
Thermistor Temp. Coefficient	TC_{TH}	T_{OP}=25 °C	-	-4.4	-	%/°C
TEC Current	I_{TEC}	-40<T_C<+85°C, I_F = 100 mA	-1.5	-	1.6	A
Fiber Length	-	May include splice	1.0	1.5	-	m
Fiber Buffer	-	-	-	900	-	µm
Fiber Core / Cladding	-	-	-	9/125	-	µm

Information contained herein is deemed reliable and accurate as of the issue date. EMCORE reserves the right to change the design or specification at any time without notice.

RF Characteristic

Parameter	Symbol	Condition	Min	Typ	Max	Unit
Frequency Range	F	-	5	-	1200	MHz
Frequency Response	S21	I_F = 60 mA, 5 MHz-1200 MHz	-	-	±1.0	dB
Carrier-to-Noise Ratio	CNR	-	51	-	-	dB
Comp. Second Order, 1616A	CSO	4, 6, 8 mW options ≥ 10 mW options	55 57	- -	- -	dB dB
Composite Triple Beat, 1616A	CTB	-	65	-	-	dB
Relative Intensity Noise	RIN	-	-	<-155	-	dB/Hz

OMI = 3.2% for 110ch NTSC option
OMI = 3.7% for 79ch NTSC option

In order to prevent reflection-induced distortion, the laser must be connected to an optical cable having a return loss of at least 55 dB for discrete reflections and 30 dB for distributed reflections.

Outline Drawing (dimensions are in inches & mm)

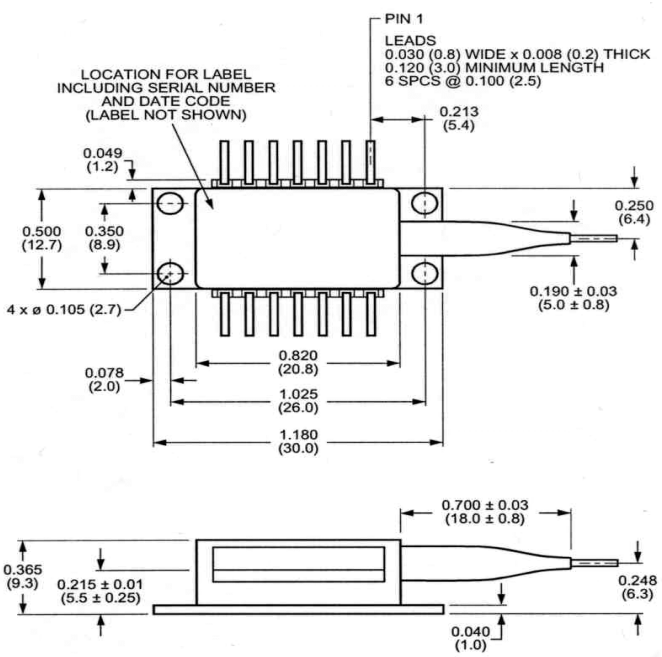

Information contained herein is deemed reliable and accurate as of the issue date. EMCORE reserves the right to change the design or specification at any time without notice.

Electrical Schematics

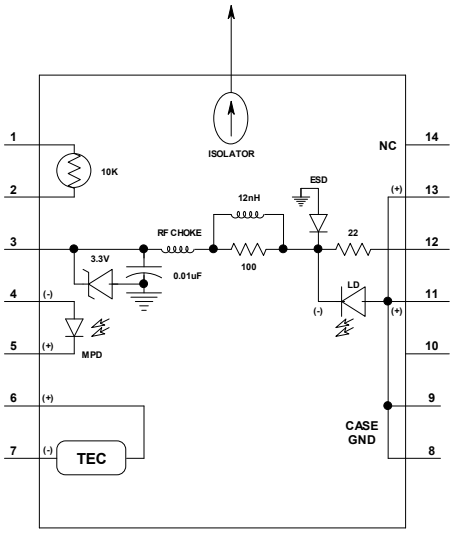

Figure 1. 1616A Laser Schematic

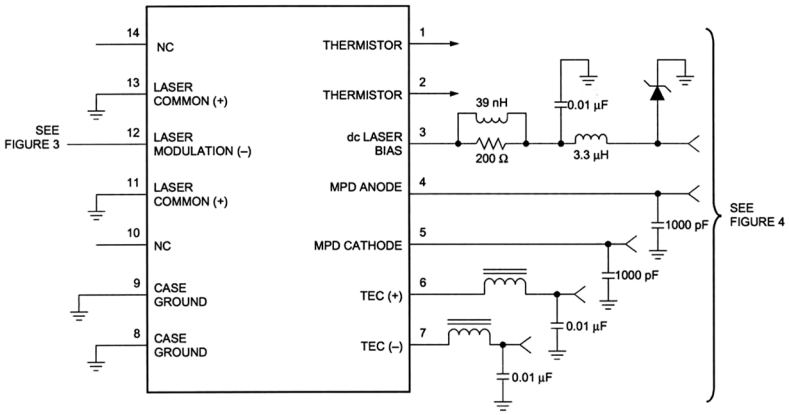

Figure 2. Suggested Matching Circuit for 1616A

Pin Definitions

Pin	Description
1	Thermistor
2	Thermistor
3	Dc Laser Bias (-)
4	MPD Anode (-)
5	MPD Cathode (+)
6	Thermal Electric Cooler (+)
7	Thermal Electric Cooler (-)
8	Case Ground
9	Case Ground
10	NC
11	Laser Common (+)
12	Laser Modulation (-)
13	Laser Common (+)

Information contained herein is deemed reliable and accurate as of the issue date. EMCORE reserves the right to change the design or specification at any time without notice.

Ordering Code Definitions

1616x – www – yy – zz

Family Name

Analog 1310 nm, DFB, Laser

Distortion Performance

X = A Standard Performance

Frequency Plan

www = 079: 79 Channel NTSC

Optical Connector

yy = SC: SC/APC

Minimum Optical Power

zz = 04: 4 mW*	zz = 16: 16 mW
zz = 06: 6 mW*	zz = 20: 20 mW
zz = 08: 8 mW*	zz = 22: 22 mW
zz = 10: 10 mW	zz = 25: 25 mW
zz = 13: 13 mW	zz = 28: 28 mW
	zz = 31: 31 mW

*Note: Lossy splice may be applied for output power 4 mW to 8 mW.

Information contained herein is deemed reliable and accurate as of the issue date. EMCORE reserves the right to change the design or specification at any time without notice.

Laser Safety

This product meets the appropriate standard in Title 21 of the Code of Federal Regulations (CFR). FDA/CDRH Class 1 laser product. This device has been classified with the FDA/CDRH under accession number 0220191.

All Versions of this laser are Class 1 laser product, tested according to IEC 60825-1:2014/EN 60825-1:2014

Single-mode fiber pigtail with SC/APC connectors (standard).

Wavelength = 1.3 µm.

Maximum power = 50 mW.

Because of size constraints, laser safety labeling (including an FDA class 1 label) is not affixed to the module, but attached to the outside of the shipping carton.

Product is not shipped with power supply.

Caution: Use of controls, adjustments and procedures other than those specified herein may result in hazardous laser radiation exposure.

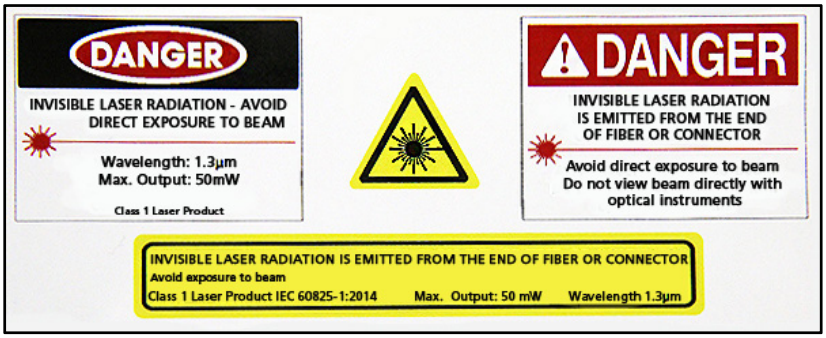

Information contained herein is deemed reliable and accurate as of the issue date. EMCORE reserves the right to change the design or specification at any time without notice.